For Your Convenience: This Twin Disc File Is Shared By Diesel Parts Direct

DIESEL PARTS DIRECT

YOUR ONE STOP SUPERSTORE FOR DIESEL ENGINE PARTS

SHOP NOW

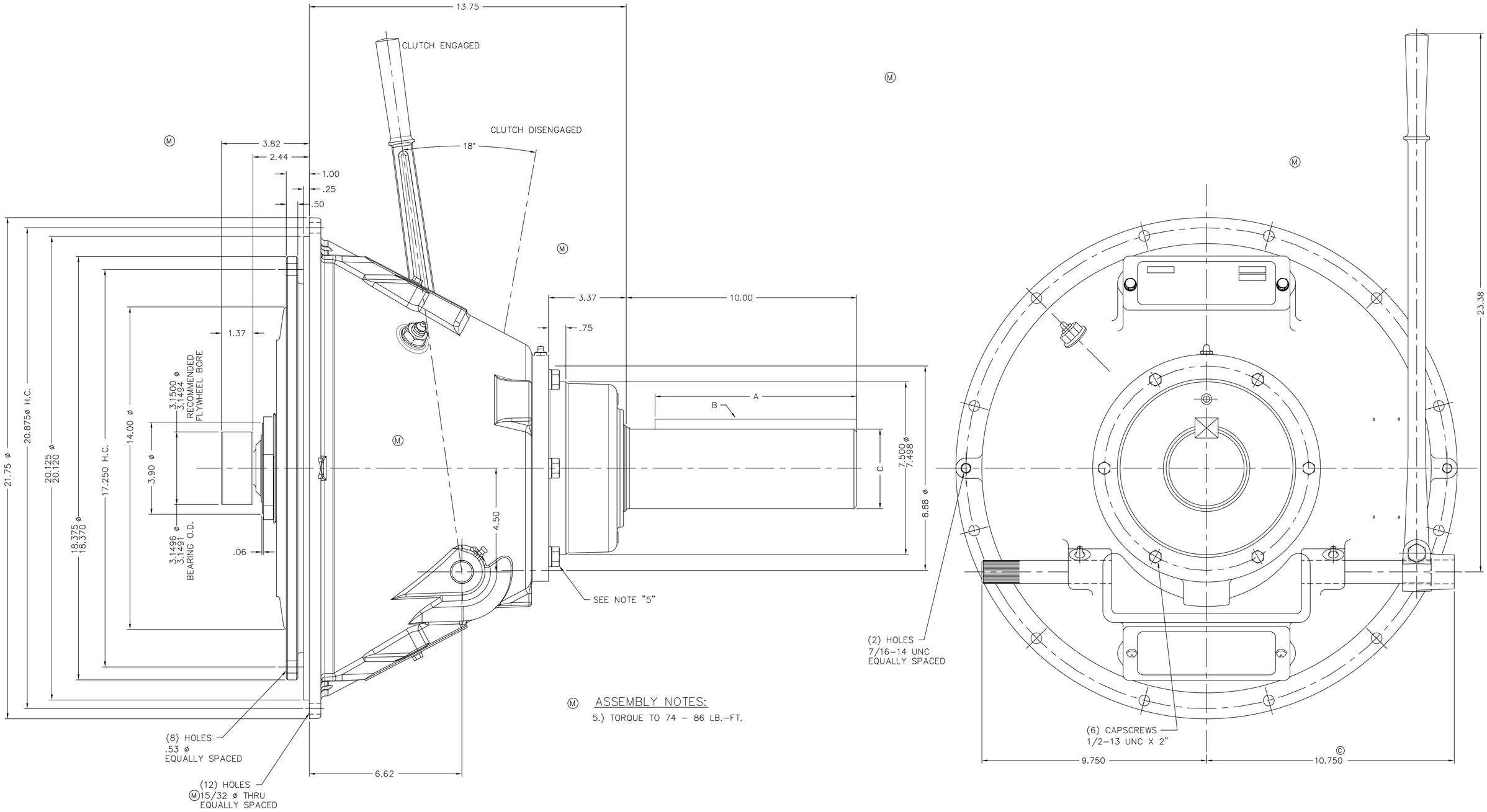

Ⓜ ASSEMBLY NOTES:

5.) TORQUE TO 74 – 86 LB.–FT.

Ⓜ NOTE:

DIMENSIONS WITHOUT TOLERANCES ARE FOR REFERENCE ONLY

	BOM	SHAFT #	A (KEYWAY)	B (KEY)	C
Ⓜ	SP214P101	B5027A	8.75	0.875 SQ. x 8.75	ø 3.500 3.499
	SP214P103	B5027A	8.75	0.875 SQ. x 8.75	ø 3.500 3.499

GENERAL NOTES:

a.) REFER TO BILL OF MATERIAL LIST WHEN ORDERING PARTS.

b.) REFER TO CARE & OP. MANUAL FOR ADDITIONAL INFO.

NOTICE! THIS PRINT CONTAINS PROPRIETARY INFORMATION AND IS NOT TO BE USED IN ANY MANNER DETRIMENTAL TO THE INTERESTS OF TWIN DISC, INCORPORATED RACINE, WI 53403 – USA THIS NOTICE IS NOT INTENDED TO NULLIFY OR LIMIT RIGHTS GRANTED TO THE U.S. GOVERNMENT OR OTHERS BY CONTRACT.

MATERIAL

HEAT TREAT

SURFACE TREATMENT

WEIGHT LBS. | WR² LBS. IN²

FIRST USE

ASSY.

MODEL

NAME SP214P1 PTO

UNLESS OTHERWISE SPECIFIED MACHINED DIMENSIONS Ⓜ X.X ±0.030 X.XX ±0.010 X.XXX ±0.005 ALL ANGULAR TOLERANCES ±1° GEOMETRIC TOLERANCING PER ANSI Y14.5M 1982

THIRD ANGLE PROJECTION

SIMILAR TO

TWIN DISC INCORPORATED RACINE, WI 53403 – USA

DATE 5–3–93

SCALE .50=1"

DRN. F. CURTIS

CHK. J.M. SABEE

APPD. J.M. SABEE

SP214P101

SP214P103 Ⓜ

SHEET 2 OF 2 REV M