## *For Your Convenience: This Twin Disc File Is Shared By Diesel Parts Direct*

DIESEL PARTS DIRECT

**YOUR ONE STOP SUPERSTORE FOR DIESEL ENGINE PARTS**

**SHOP NOW**

NOTE:
TO INSURE NO PRELOAD ON SHIFTING MECHANISM. HAND LEVER POSITION IN THE ENGAGED POSITION SHOULD BE VERTICAL OR SLIGHTLY OVER CENTER OF DISENGAGED POSTION.

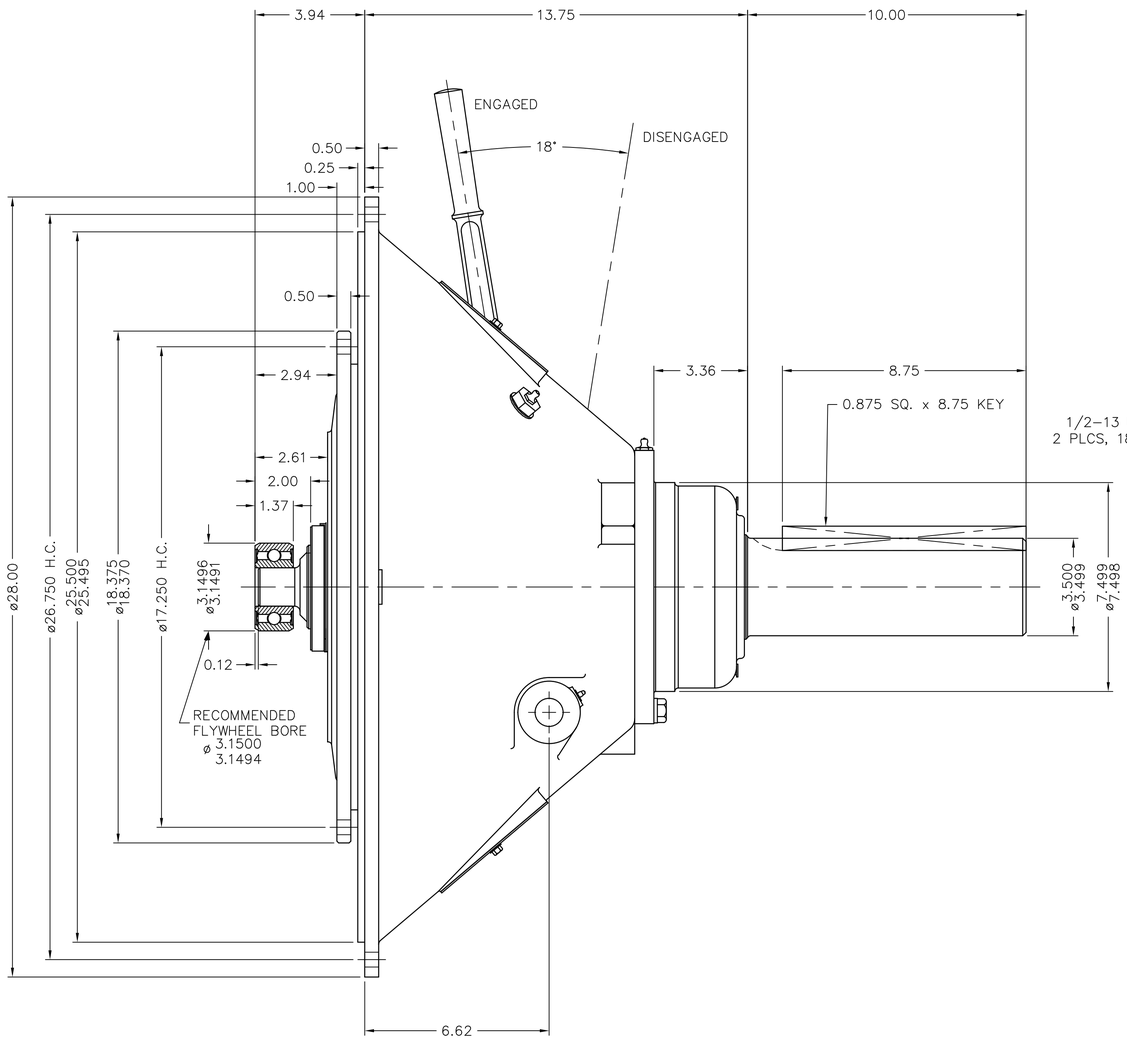


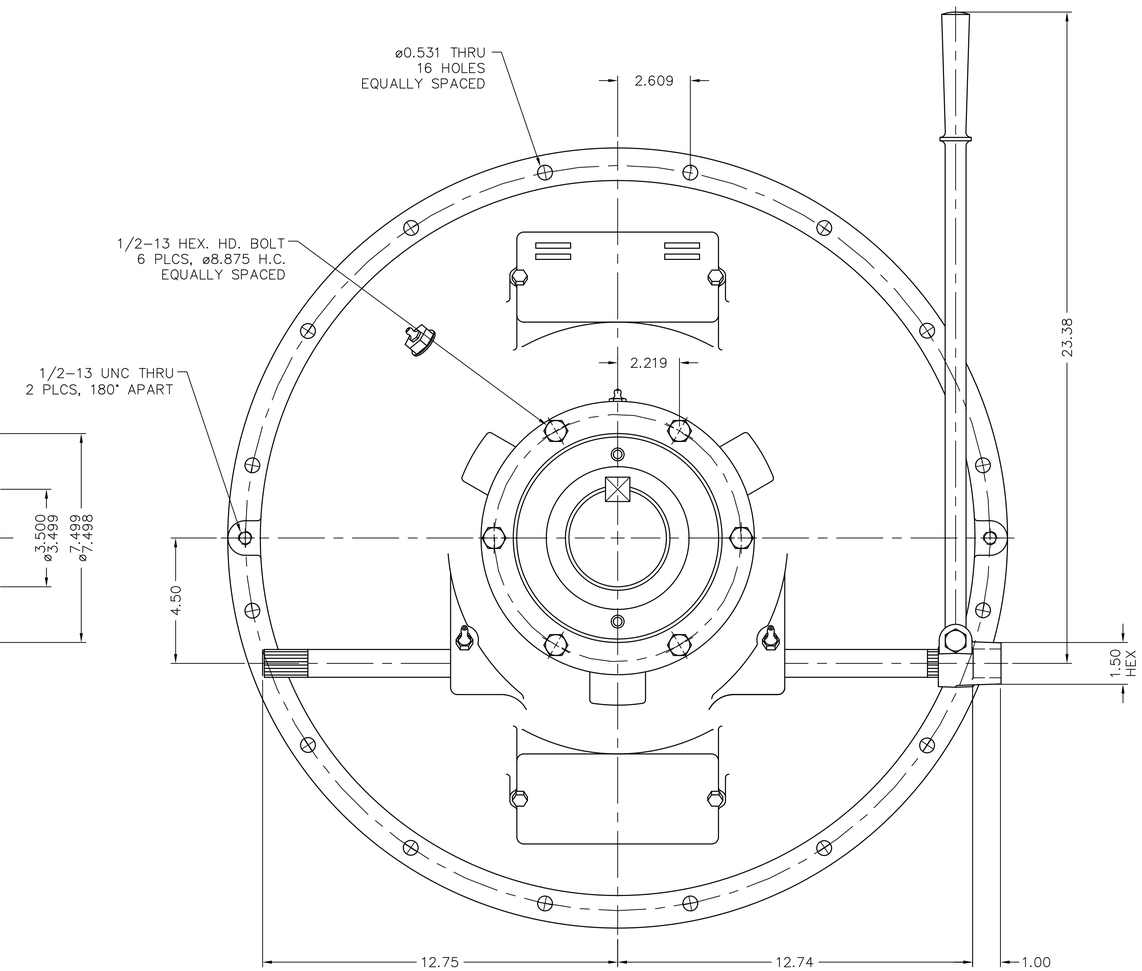


GENERAL NOTES:

a.) REFER TO BILL OF MATERIALS LIST WHEN ORDERING PARTS.
b.) REFER TO CARE & OP. MANUAL FOR ADDITIONAL INFO..
c.) INSTALLER SUPPLIED SUPPORT PLATE MUST BE USED.
d.) FACE OF SAE HOUSING TO BOTTOM OF PILOT BORE IN FLYWHEEL.

| | | | | | |
|---|---|---|---|---|---|
| UNLESS OTHERWISE SPECIFIED MACHINED DIMENSIONS X.X ±0.030 X.XX ±0.010 X.XXX ±0.005 ALL ANGULAR TOLERANCES ±1° GEOMETRIC TOLERANCING PER ASME Y14.5M 1994 | WEIGHT LBS. / WR² LBS./IN² | FIRST USE ASSY. SP214P001 MODEL SP214P0 | INCH | MATERIAL | HEAT TREAT |
| | NOTICE! THIS PRINT CONTAINS PROPIETARY INFORMATION AND IS NOT TO BE USED IN ANY MANNER DETRIMENTAL TO THE INTEREST OF TWIN DISC, INCORPORATE. THIS NOTICE IS NOT INTENDED TO NULLIFY OR LIMIT RIGHTS GRANTED TO THE U.S. GOVERNMENT OR OTHERS BY CONTRACT. | | THIRD ANGLE PROJECTION | SIMILAR TO X9803 | NAME SP214P0 POWER TAKEOFF |

| | |
|---|---|
| DATE | 06–26–02 |
| SCALE | .38 = 1 |
| DRN. | DJH |
| CHK. | JTS |
| APPD. | JTS |
| DWG SIZE | D |
| SHT. | 2 OF 2 |
| REV | D |

TWIN DISC
INCORPORATED
RACINE, WI 53403 – USA

SP214P001