NOTE:
TO INSURE NO PRELOAD ON SHIFTING MECHANISM. HAND LEVER POSITION SHOULD BE SLIGHTLY PAST VERTICAL POSITION OR TOWARDS ENGINE.

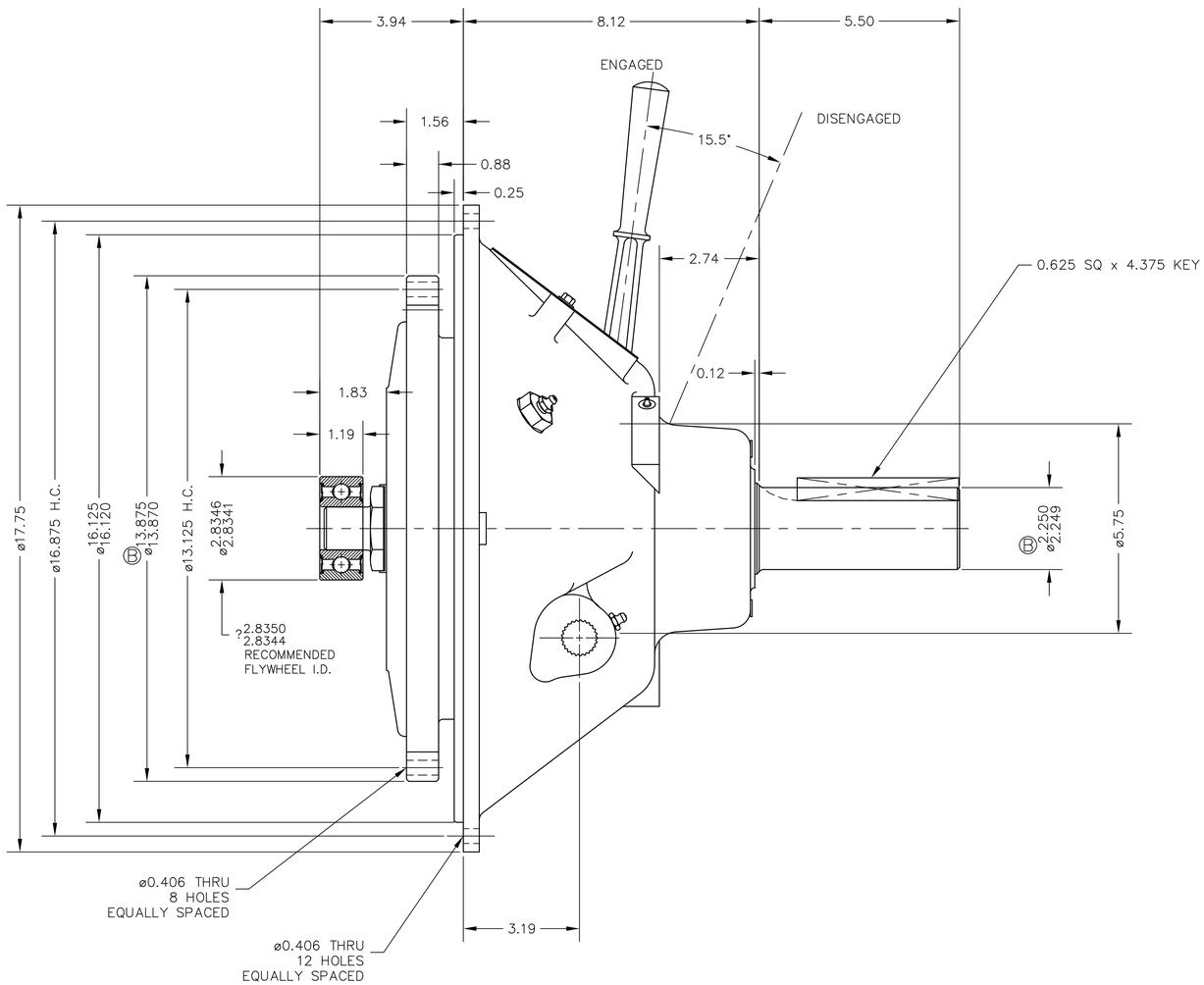

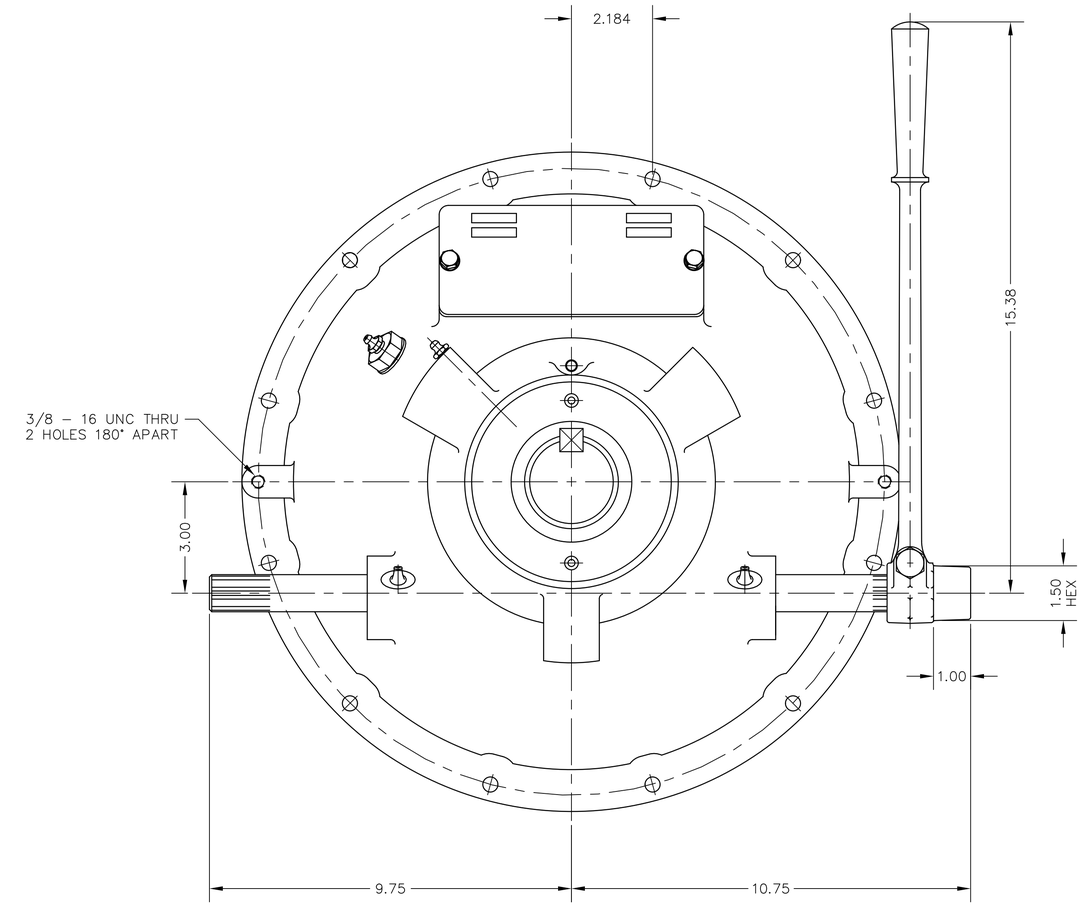

GENERAL NOTES:
a.) REFER TO BILL OF MATERIAL WHEN ORDERING PARTS.
b.) REFER TO CARE & OPERATION MANUAL FOR ADDITIONAL INFO.

Ⓑ NOTE:
DIMENSIONS WITHOUT TOLERANCES ARE FOR REFERENCE ONLY

UNLESS OTHERWISE SPECIFIED MACHINED DIMENSIONS X.X ±0.030 Ⓑ X.XX ±0.010 X.XXX ±0.005 ALL ANGULAR TOLERANCES ±1° GEOMETRIC TOLERANCING PER ASME Y14.5M 1994	WEIGHT LBS.	WR² LBS./IN²	FIRST USE ASSY. SP111P304 MODEL SP111HP3	INCH	MATERIAL	HEAT TREAT
	NOTICE! THIS PRINT CONTAINS PROPRIETARY INFORMATION AND IS NOT TO BE USED IN ANY MANNER DETRIMENTAL TO THE INTEREST OF TWIN DISC, INCORPORATE. THIS NOTICE IS NOT INTENDED TO NULLIFY OR LIMIT RIGHTS GRANTED TO THE U.S. GOVERNMENT OR OTHERS BY CONTRACT.			THIRD ANGLE PROJECTION	SIMILAR TO SP111P304	NAME SP111HP3 POWER TAKE OFF

DATE 12-06-05	TWIN DISC INCORPORATED RACINE, WI 53403 – USA
SCALE .50 = 1	
DRN. DJH	SP111P304
CHK. JTS	
APPD. JTS	DWG SIZE D · SHT. 2 OF 2 · REV B