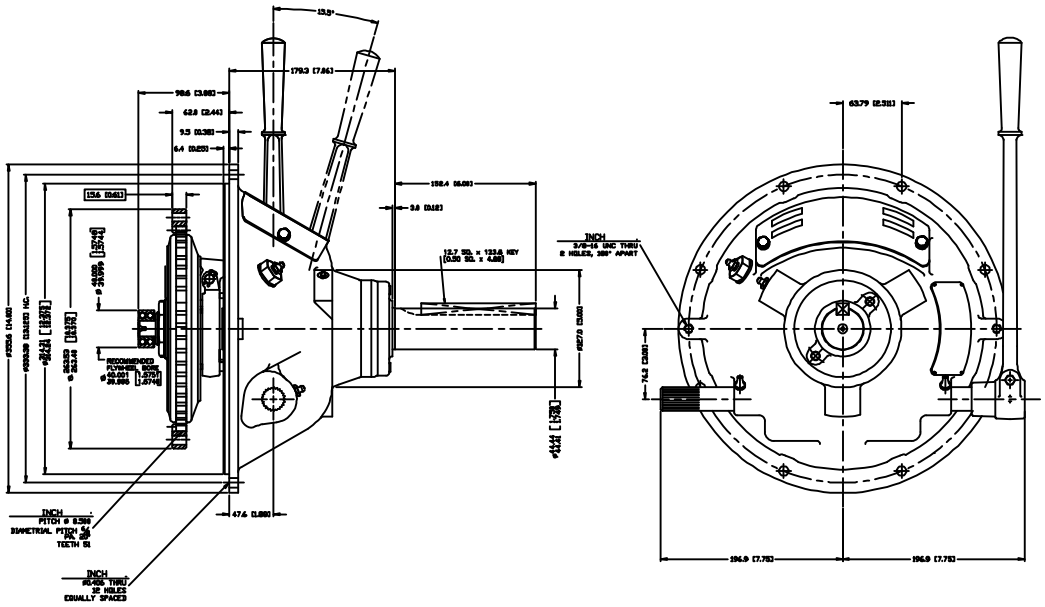

GENERAL NOTES:
a.) REFER TO BILL OF MATERIAL WHEN ORDERING PARTS.
b.) REFER TO CARE & OPERATION MANUAL FOR ADDITIONAL INFO.

UNLESS OTHERWISE SPECIFIED DIMENSIONS ARE IN MILLIMETERS TOLERANCES ON DECIMALS .X ±0.1 .XX ±0.05 .XXX ±0.025 ALL ANGULAR TOLERANCES ±0° GEOMETRIC TOLERANCING PER ASME Y14.5M 1994	REVISION	SHEET	FIRST USE CX108HP5	METRIC	MATERIAL	HEAT TREAT
			THIRD ANGLE PROJECTION		SCALE: 1:1	TITLE POWER TAKE OFF C108HP5

DATE 02/23/2011
SCALE .50 = 1
DWN. J.R.
CHK. ZP
APVD. GEM
TWIN DISC INCORPORATED RACINE, WI 53403 - USA
CX108P506
SIZE A1 SHT. 2 OF 2 REV. F